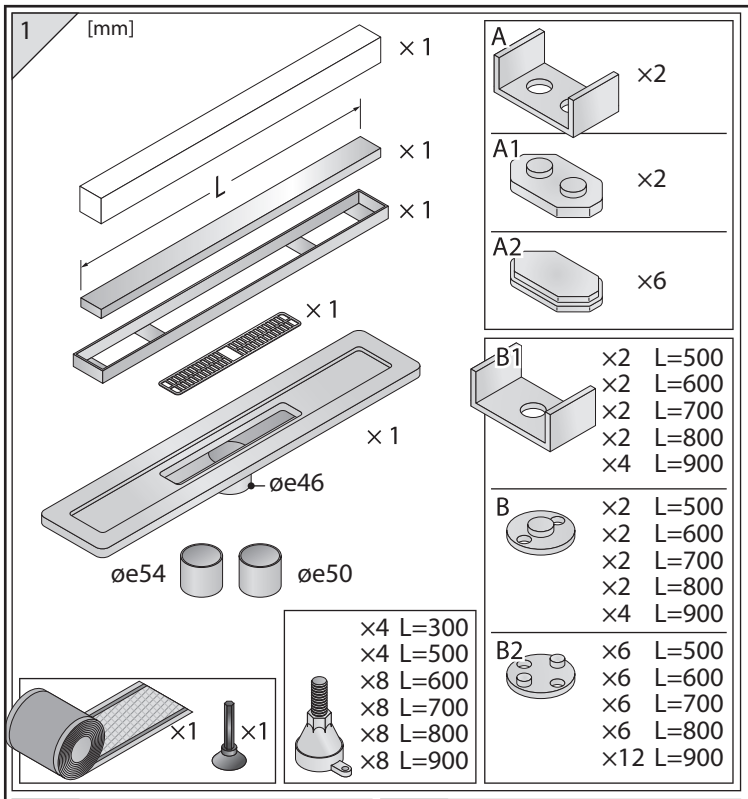

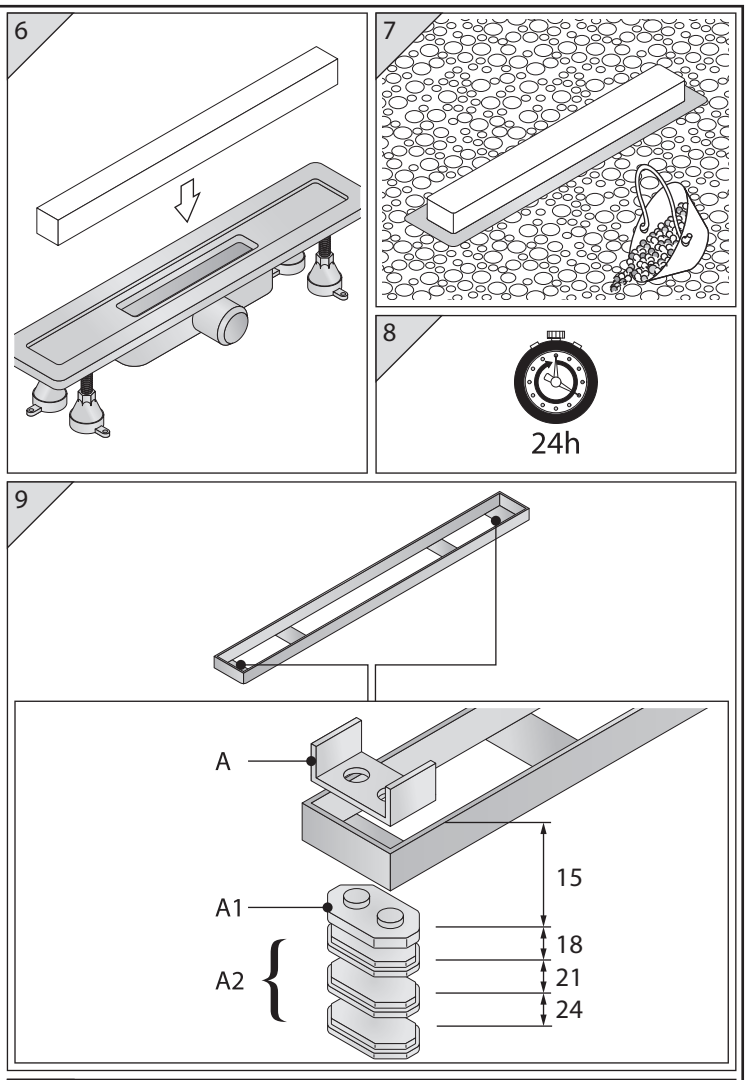

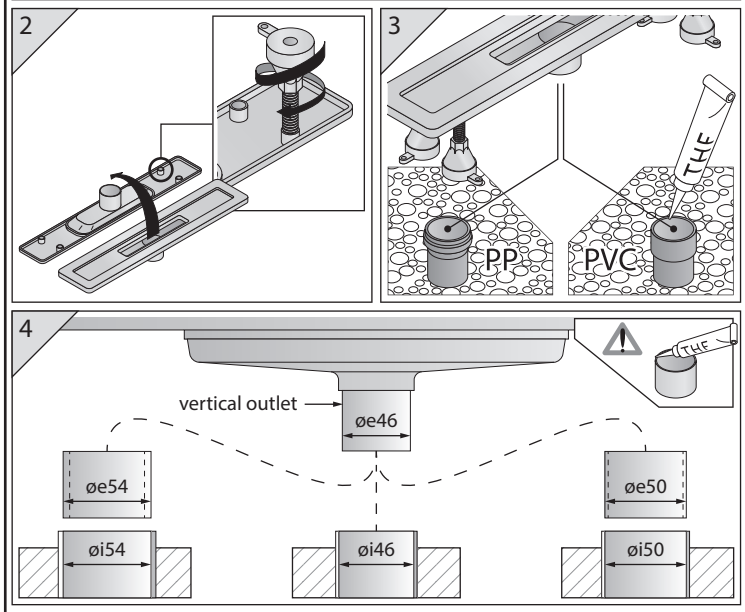

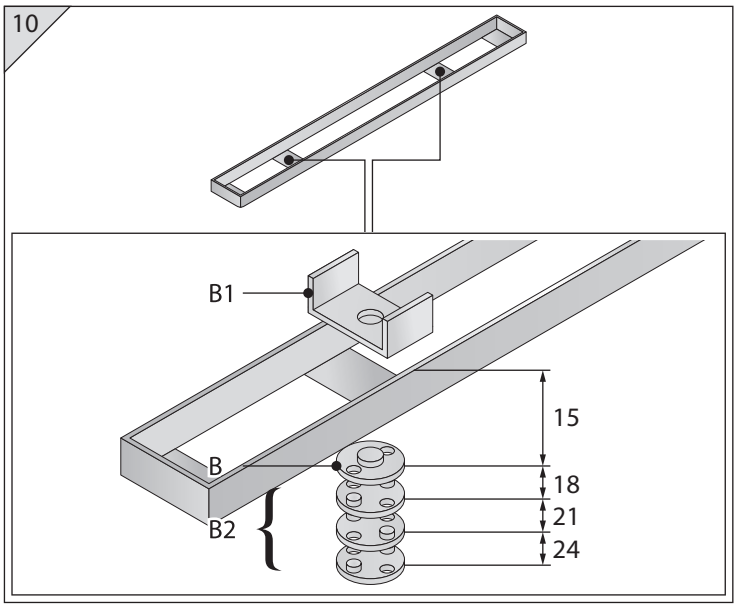

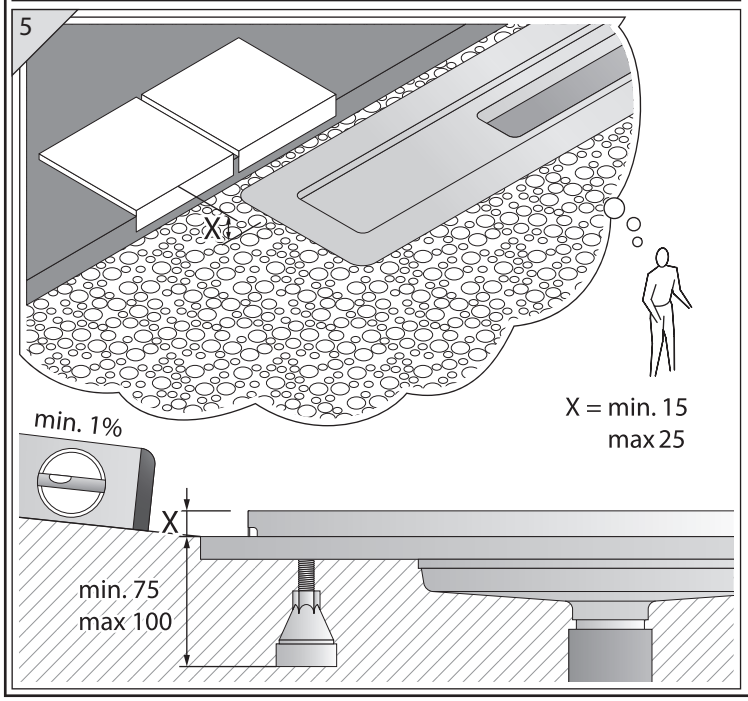

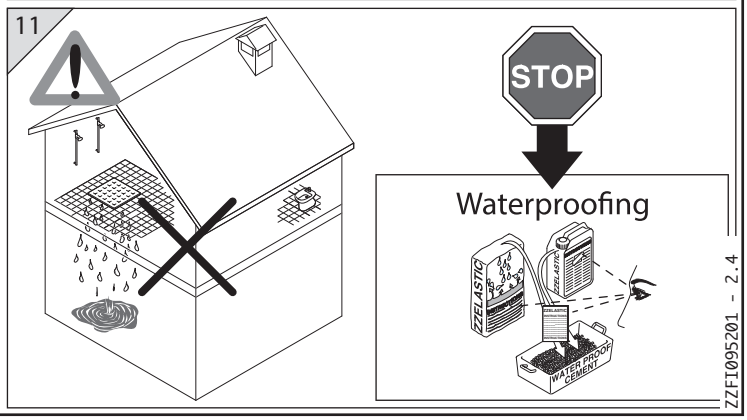

ZZFI095201 - 2.4

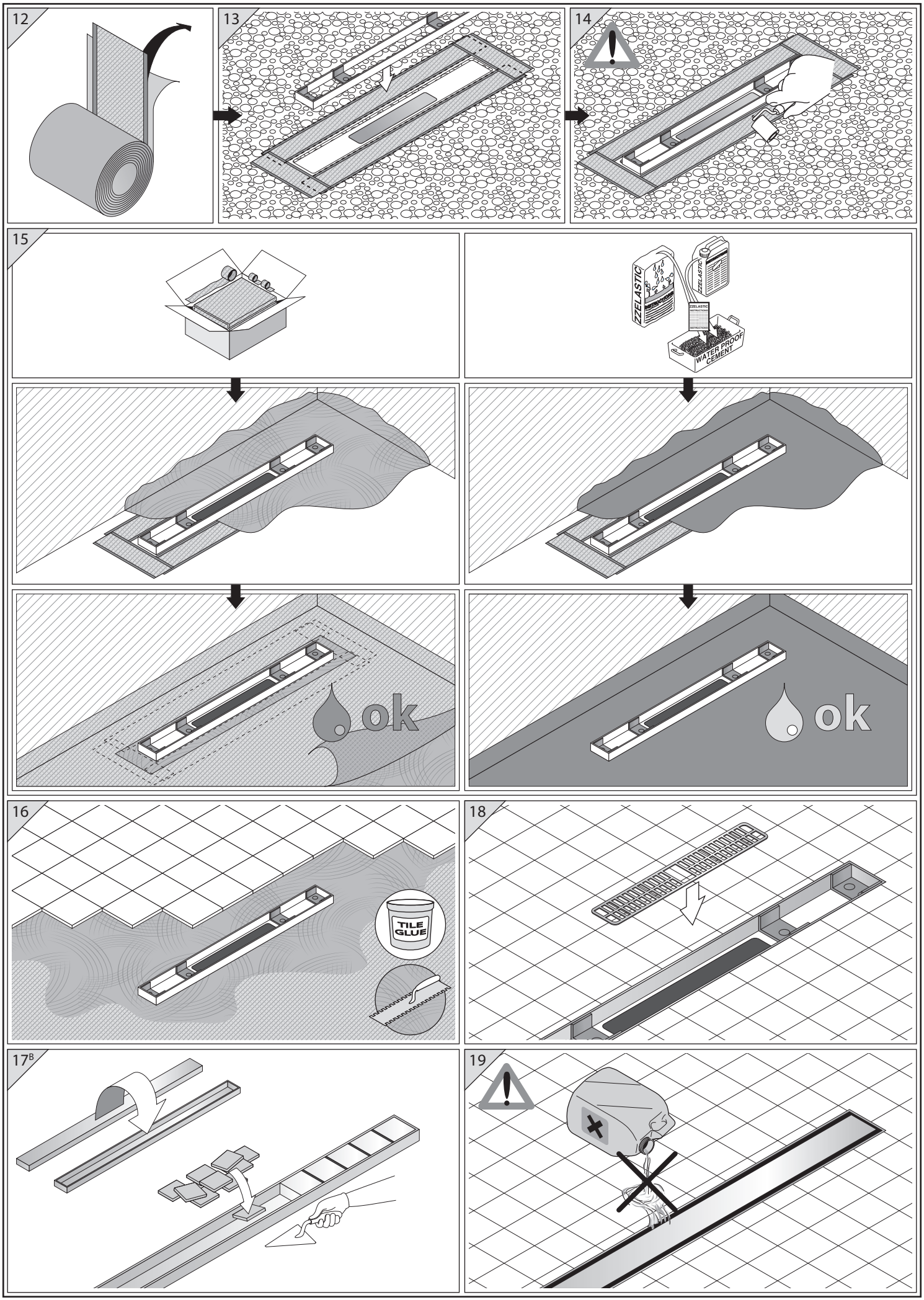
12
13
14
15
ZZELASTIC
WATER PROOF CEMENT
ok
ok
16
TILE GLUE
18
17B
19