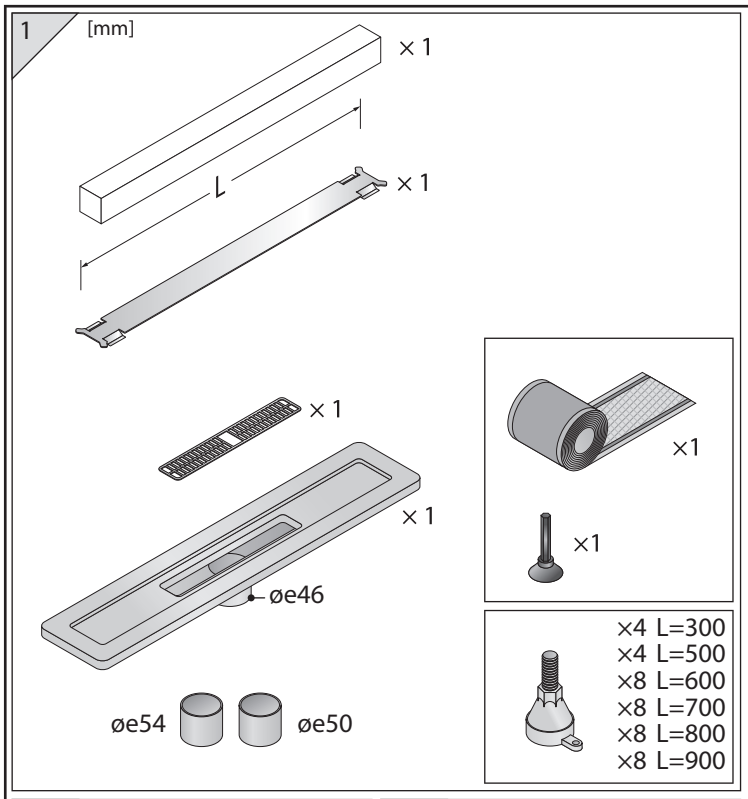

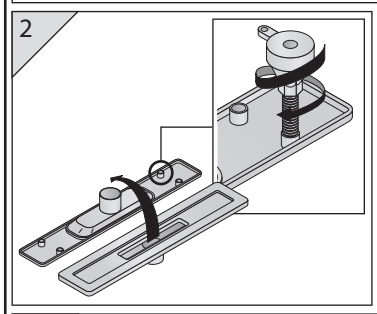

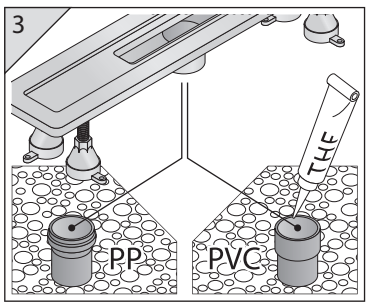

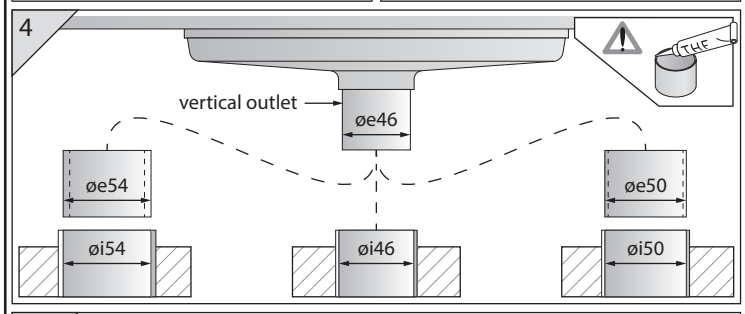

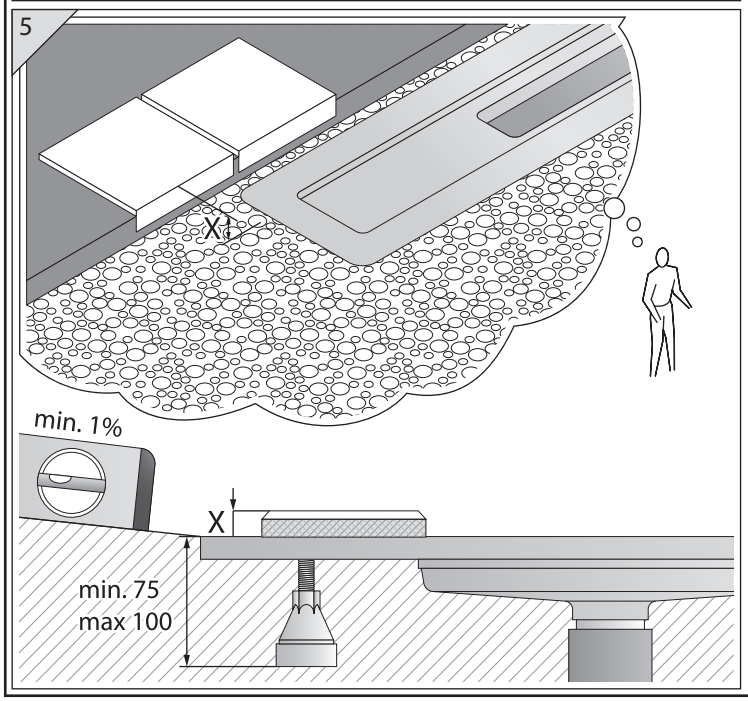

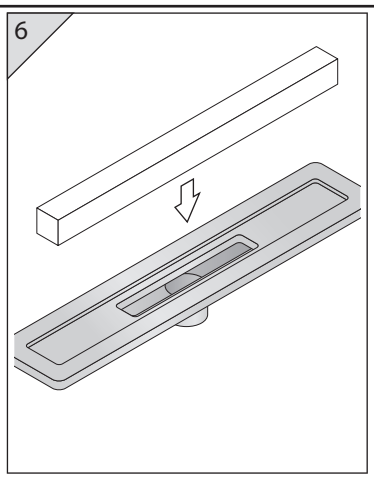

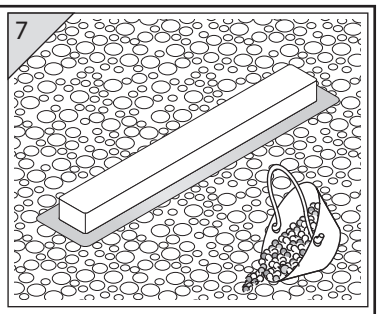

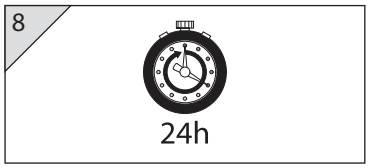

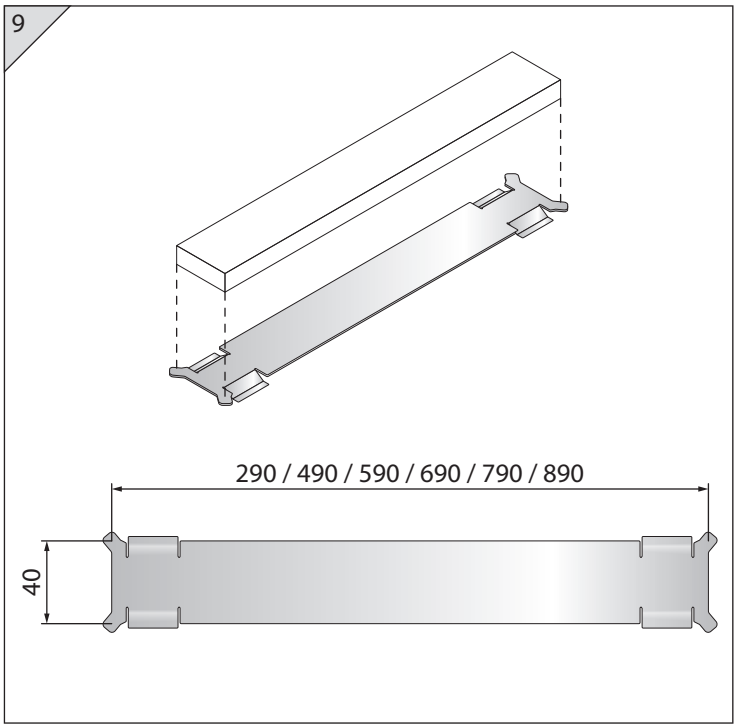

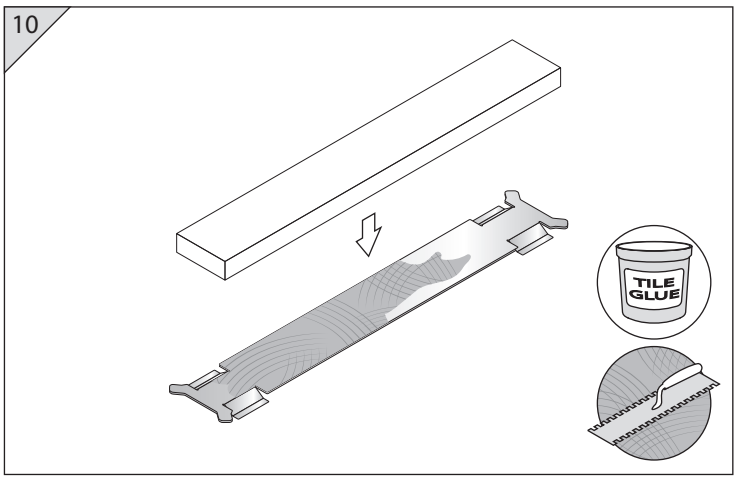

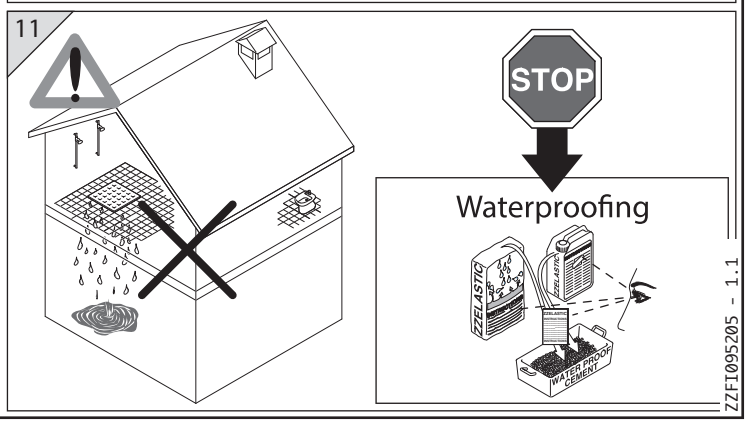

ZZFI095205 - 1.1

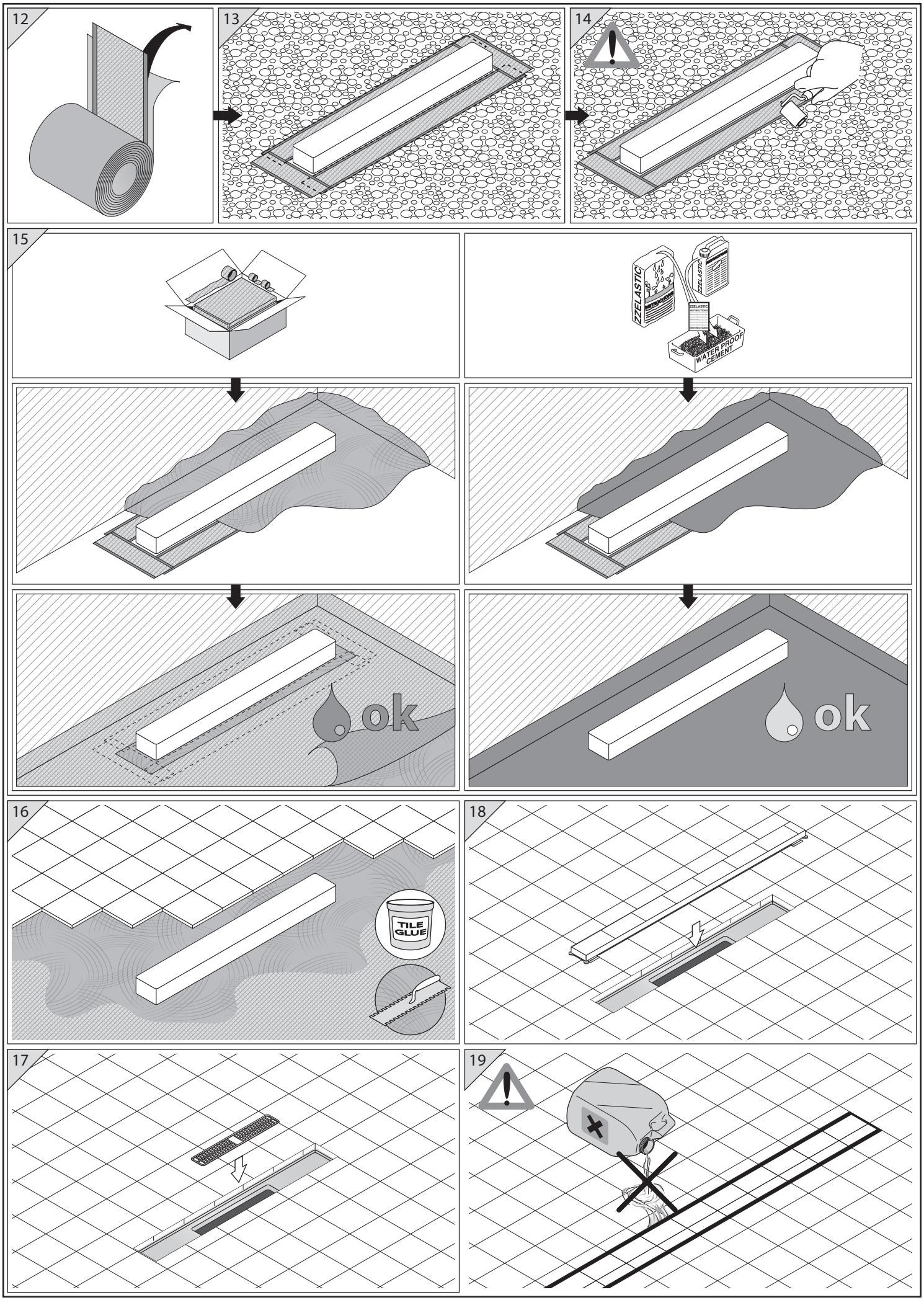
12
13
14
15
ZZELASTIC
WATER PROOF CEMENT
ok
ok
16
TILE GLUE
18
17
19